PREPARED FOR QUARRY SOLUTIONS PTY LTD C/- GROUND WORKS PLUS
FEBRUARY 2018
15-001850-RP01
ORIGINAL
WATER & ENVIRONMENT

Coraki Quarry Water Management Plan
Report

COMMERCIAL IN CONFIDENCE

Calibre Consulting
Level 4, HQ@Robina
1 Laver Drive
ROBINA QLD 4226

Ph: (07) 5575 7191

DOCUMENT CONTROL

15-001850-RP01

Issue	Date	Issue Details	Author	Checked	Approved
A	12/09/2016	Draft For Discussion	DY	AMcP	AMcP
B	16/09/2016	Final for Approval	DY	AMcP	AMcP
C	16/02/2018	Authority approval correspondence attached	VB	MS	MS on behalf of AMcP

TABLE OF CONTENTS

TABLES

APPENDICES

1 INTRODUCTION

This Water Management Plan (WMP) addresses the specific Soil and Water related requirements of *Schedule 3 – Environmental Performance Conditions* of the Development Consent for Development Application No. SSD 7036, issued to Quarry Solutions Pty Ltd by the NSW Department of Planning and Environment (the Department) on 18 April 2016 for the Coraki Quarry Project.

Further to the Development Consent, Quarry Solutions was also issued with a License Variation (Ref: 1537483; EF15/15700, dated 27 January 2016) which outlines variations to the conditions of the existing Environmental Protection License No. 3397 issued by the NSW Environmental Protection Agency (EPA) under the *Protection of the Environment Operations Act 1997.* This WMP provides the information required to demonstrate that the proposed operation of the Coraki Quarry will be in accordance with the relevant conditions of License 3397 as outlined herein.

The proposed development seeks to establish the Coraki Quarry (within Lot 401 on DP633427, Lots 402 and 403 on DP802985 and Lot 408 on DP1166287). The Site is ideally situated for a quarry, being centrally located within the Site, well separated from sensitive receivers and incorporating the existing Peterson's Quarry.

The development constitutes State Significant Development (SSD). Accordingly, the assessment of the Existing Environmental Values will inform the preparation of an Environmental Impact Statement (EIS) to seek approval for the proposed development.

This report (Issue C) has been provided to include correspondence from the NSW Planning & Environment, Environment & Protection Agency and Department of Primary Industries that confirms these departments and agencies endorsement of this Water Management Plan. Refer to **Appendix F** for details. Apart from this no other changes have been made to the Water Management Plan.

1.1 SITE DESCRIPTION

The site is primarily located at the crest of a hill and adjacent to Seelems Creek. Flow from the site discharges into Seelems Creek. The contributing catchment area of Seelems Creek to the site is in excess of 800 ha and predominantly comprises agricultural land. Seelems Creek discharges into the Richmond River approximately 6km downstream from the site, south of the township of Coraki. Refer to **Appendix C** for the waterways adjacent to the site.

The site consists of mainly open grass hillside with minor patchy scrub towards to lower elevations. Groundwork Plus have advised that no groundwater was detected to depths below the depth of the quarry resource, and as such, no groundwater inflows have been included in the site water balance assessment.

1.2 EXPECTED SCHEDULE OF WORKS

The following works are expected to be undertaken within Lot 401:

- Access and haul roads
- Erosion control works (temporary and permanent)
- Clean and dirty water diversion banks
- Site clearance
- Topsoil stockpiling
- Quarry extraction and operational stockpiling
- Maintenance program
- Rehabilitation

The following works are expected to be undertaken on the remaining land including the Peterson's Quarry:

- Dirty water diversion banks
- Quarry extraction and operational stockpiling
- Maintenance program

The development is planned to be undertaken in 2 phases:

- Initial extraction phase
- Final extraction phase

The 2 phases have the same overall site footprint with the only difference being the internal site layout (stockpiles and quarry floor) and haul road arrangement. For the purposes of this report, only the final extraction phase configuration has been considered.

1.3 DEVELOPMENT CONSENT REQUIREMENTS

This WMP has been prepared to address the requirements of the Development Consent for Development Application No. SSD 7036 issued by the Department. For ease of reference, the Soil and Water related conditions of the Development Consent which are addressed herein, are reproduced below (in indented and *italicised* text):

> ***SOIL AND WATER***
>
> ***Water Supply***
>
> *18. The Applicant must ensure that it has sufficient water for all stages of the development and, if necessary, adjust the scale of operations under the consent to match its available water supply, to the satisfaction of the Secretary.*
>
> ***Water Discharges***
>
> *19. The Applicant must comply with the discharge limits in any relevant EPL* [Environmental Protection License]*, or with section 120 of the POEO Act.*
>
> ***Water Management Plan***
>
> *21. The Applicant must prepare a Water Management Plan for the development to the satisfaction of the Secretary. This plan must:*
>
> *(a) be prepared by suitably qualified and experienced person/s approved by the Secretary;*
>
> *(b) be prepared in consultation with the EPA and DPI - Water;*
>
> *(c) be submitted to the Secretary for approval within 6 months of the date of this consent, or prior to the commencement of operations, whichever is earlier, unless otherwise agreed by the Secretary;*
>
> *(d) include a:*
>
> *(i) Site Water Balance that includes details of:*
>
> - *the volume of water deficit and/or surplus for dry, average and wet years, considering all planned water management infrastructure;*
> - *sources and security of water supply, including on-site water storages;*
> - *water use and management on site;*
> - *any off-site water transfers or discharges including discharge volumes and frequency; - reporting procedures; and*
> - *measures that would be implemented to minimise clean water use on site; and*

(ii) Surface Water Management Plan, that includes:

- *detailed baseline data on surface water flows and quality in water bodies that could potentially be affected by the development;*
- *a detailed description of the surface water management system on site including the:*
  - *clean water diversion system;*
  - *erosion and sediment controls;*
  - *dirty water management system; and*
  - *water storages;*
- *provision of a 40 metre buffer zone between watercourses and quarrying operations; and*
- *a program to monitor and report on:*
  - *any surface water discharges;*
  - *the effectiveness of the water management system; and*
  - *surface water flows and quality in local watercourses.*

The Applicant must implement the approved management plan as approved from time to time by the Secretary.

1.4 RELEVANT LICENSE VARIATION CONDITIONS

The relevant conditions (including recent variations) of the existing Environmental Protection License No. 3397 (EPL) addressed in this WMP pertain to Section 3 Limit Conditions, Section 4 Operating Conditions and Section 5 Monitoring and Recording Conditions. In accordance with *Condition 20* of the Development Consent approval, the water discharge limits for the site are outlined in condition *L2 Concentration Limits* of the EPL, and summarised below in **Table 1**.

Table 1: EPL Discharge Limits

Total Suspended Solids (mg/L)	pH		Oil & Grease (visibility)
	Lower	Upper	
50	6.5	8.5	Nil

2 WATER MANAGEMENT PLAN

During the construction and operational phase of the quarry development, a large amount of soil has the potential to be eroded and deposited onto nearby lands or downstream receiving environments. To minimise the potential impacts of land disturbances from the development, a Water Management Plan has been prepared based on *Managing Urban Stormwater Soils and Construction: Volume 1 (Blue Book) and Volume 2E (Mines & Quarries)*.

This WMP details the surface water management strategy for the Site, which involves a system of dirty water collection drains that convey surface water runoff to respective sedimentation basins. A total of 3 sedimentation basins are proposed for the development (as per the conceptual surface water management sketch in **Appendix A**). The sedimentation basins have been sized in accordance with *Managing Urban Stormwater Soils and Construction: Volume 1 (Blue Book) and Volume 2E (Mines & Quarries)*. The sedimentation basins have been sized to capture the 90th percentile, 5-day rainfall event for their respective catchments as well as additional storage to provide sufficient water supply to service site demands. The ability for the site sediment basins to provide stormwater quality polishing and treatment as well as meet the site water supply requirements is detailed in the Detailed Site Water Balance provided in **Section 2.3**.

The following sections deal with the requirements of *Condition 21* of the Development Consent approval.

2.1 SURFACE WATER BASELINE DATA

In accordance with Condition 21 (ii) of the Development Consent approval, detailed baseline data on surface water flows and quality in water bodies that could potentially be affected by the development is required. No baseline data for the receiving Seelems Creek is available, however field testing of on-site water was undertaken by Groundworks Plus of the existing on-site pond and of standing water in an existing site pit. In the absence of baseline data, this field testing was compared against trigger values and discharge limits prescribed in the site EPL and the New South Wales Water Quality and River Flow Objectives (OEH 2015).

The physio-chemical indicators and numerical trigger values for uncontrolled streams within the Richmond River Catchment are presented in **Table 2**.

Table 2: Physio-chemical indicators and numerical criteria

Total Nitrogen (N) (mg/L)	Total P (mg/L)	DO (%sat)		Turbidity (NTU)	pH		Conductivity (ms/cm)
		Lower	Upper		Lower	Upper	
350	25	85	110	6-50	6.5	8.5	125-2200

The results of the field testing of on-site water undertaken by Groundworks Plus are provided in **Table 3**.

Table 3: Physio-chemical indicators from on-site sampling

Location	DO (%sat)	Turbidity (NTU)	pH	Conductivity (ms/cm)
Pit	6.3	75	8.8	490
Pond	6.4	100	7.6	930

The water quality testing undertaken on site indicates that the site dissolved oxygen (DO), turbidity and pH indicators are not in accordance with the prescribed trigger values in **Table 2**, with the exception of pH for the pond location. As such, surface water from the quarry is recommended to be captured and treated before discharging from the site.

2.2 SURFACE WATER MANAGEMENT SYSTEM

The following section provides a detailed description of the surface water management system on site including details of the following items in accordance with (but not limited to) Condition 21 (ii) of the Development Consent approval:

- Clean water diversion drains
- Dirty water diversion drains
- Water storages (sedimentation basins)
- Stockpiling and rehabilitation of topsoil and overburden
- On-site reuse of surface water runoff
- Fuel and chemical storage to be contained within bunded facilities
- Dosing and pump out of sediment basins after significant rainfall events

The standard drawings from the Blue Book that are applicable to the project are discussed in **Section 2.2.5**. These standard drawings have been included in **Appendix B**.

2.2.1 CLEAN WATER DIVERSIONS

Clean water diversion bunds are located as per the site plans provided in **Appendix A**, near the western site boundary to divert clean water around the site. A clean water diversion swale is proposed near the western edge of the site adjacent to the indigenous heritage non-disturbance zone. This clean water diversion helps to minimise the required onsite sediment basin size.

2.2.2 DIRTY WATER DIVERSIONS

Dirty water diversion drains are located as per the site plans provided in **Appendix A** and are designed to convey runoff from the contributing catchments up to and including the 10-year ARI storm event and generally in accordance with the relevant standard drawings listed in **Section 2.2.5** below. Manning's equation calculations for open channel flow were carried out for the proposed trapezoidal channels at a point immediately upstream of the inlets to Basin 2 and 3 where the flows are expected to be greatest due to the largest contributing catchment areas. The proposed channel cross sections and slopes (provided by the quarry operators Quarry Solutions) for Basin 2 and 3 were found to have sufficient capacity to convey the expected 10-year ARI storm discharges from the site, inclusive of 300mm freeboard within each channel. These Manning's calculation summary sheets were based from Rational Method flow estimations, both provided in **Appendix E**.

The inlet and outlet zones for each sediment basin is to be stabilised with energy dissipating devices (e.g. matting or rock protection) to ensure scouring does not undermine these areas. Where flow velocities are expected to result in scour and/or erosion within diversion drains (typically associated with steep grades and/or unstable channel materials) channel stabilising is required with appropriate lining (e.g. matting or rock protection) in accordance with *Table 5.2 Maximum Design Flow Velocities in Waterways* within *Managing Urban Stormwater Soils and Construction: Volume 1 (Blue Book).* The use of rock check dams within diversion channels should also be adopted for the dissipation of high energy flows generally in accordance with the relevant standard drawings listed in **Section 2.2.5** below.

2.2.3 EROSION AND SEDIMENT CONTROL

In order to control and mitigate the discharge of sediment laden runoff to the receiving Seelems Creek waterway, three on-site sediment basins are proposed. All on-site sedimentation basins have been sized in accordance with the

guidelines set out in *Managing Urban Stormwater Soils and Construction: Volume 1 (Blue Book) and Volume 2E (Mines & Quarries).* The sedimentation basins will not need to comply with the harvestable rights dam maximum on the basis that they will be required for treatment of sediment laden water. The EPA, under the Environmental Protection License includes a condition which requires treatment of sediment laden water prior to release.

In the absence of site specific soil data, information on the likely soil type has been sourced from the Lismore-Ballina Soil Landscape section of the Blue Book (Appendix C – Table C2) for Coraki. Conservatively, we have adopted a soil type for the mine as 'Type F' (bulk of soil is fine grained with 33% finer than 0.02mm).

The total volume of a 'Type F' sediment basin is the sum of the following two components:

- A settling zone, within which water is stored allowing the settlement of suspended sediment, and
- A sediment storage zone, where deposited sediment is stored until the basin is cleaned out.

The settling zone volume is determined from the 90th percentile, 5-day rainfall event as per Table 6.1 in the Mines and Quarries book. This is the minimum design requirement for a 'Type F' sedimentation basin for quarries with a disturbance duration greater than 3 years.

The design rainfall depth has been taken from the closest site rainfall depth chart in the Blue Book (Table 6.3a). The Lismore (058037) 90th percentile, 5-day rainfall depth is 60.2 mm. The volumetric runoff coefficient (C_V) adopted for the site is 0.74. This value is higher than that recommended in Table F3 (Appendix F of the Blue Book) for the expected soil type at Coraki for disturbed sites (upper limit C_V for Coraki of 0.48). The adopted C_V is reflective of the disturbance activity (quarrying) and the type of quarry material which will result in a high runoff potential from the site.

Contributing catchment areas to each sedimentation basin are provided in **Appendix A** for the final extraction stages.

The sediment storage zone is taken as either the:

- 50% of the settling zone capacity, or
- Two months' soil loss as calculated with the Revised Universal Soil Loss Equation (RUSLE).

It was found that 50% of the settling zone capacity yields a larger storage volume for each sedimentation basin and was therefore adopted for calculating the total sediment storage volume. These results are summarised in **Table 4**.

Table 4: Sedimentation Basin Sizing – 90th percentile, 5 day storm

Catchment Name	Stage	Area (ha)	Required Settling Zone Volume (m³)	Required Sediment Storage Zone			Total Sedimentation Basin Volume (m³)
				50% of Settling Zone volume (m³)	RUSLE Two Month Calculated Soil Loss (m³)	Adopted Sediment Storage Zone (m³)	
1	Final	6.52	2,905	1,453	362	1,453	4,358
2	Final	21.0	9,355	4,678	1,166	4,678	14,033
3	Final	17.4	7,765	3,882	846	3,882	11,647

The total sedimentation basin volumes calculated in **Table 4** are required for the sediment control function of the basin only. The total adopted volume of each on-site basin is provided as part of the Detailed Site Water Balance detailed in **Section 2.3**, below, which also considers the water supply requirements of each basin in addition to sediment control.

The required sedimentation basin volume for catchment 1 in **Table 4** have been split into 2 basins due to horizontal site constraints. Internal site drainage within these catchments to Sedimentation Basin 1.1 and 1.2 (as labelled on the site plans in **Appendix A**) will be confirmed during detailed design.

In accordance with *Managing Urban Stormwater Soils and Construction: Volume 1 (Blue Book)*, each sediment basin is typically required to have a minimum flow-path length to effective width ratio of 3 to 1 to reduce short-circuiting and

facilitate effective sediment settling. In order to achieve this minimum ratio for Basins 2 and 3 the construction of baffles would be required. However, due to the nature of the quarry operations, the relative infrequency of overtopping of these basins and the high frequency of draw down for site re-use, the implementation of baffles to achieve the minimum required length-width ratio was not deemed to be necessary. No baffles are proposed for this project.

In accordance with *Managing Urban Stormwater Soils and Construction: Volume 1 (Blue Book)*, the internal batter slopes of the sediment basins are to be a maximum of 2.5(H) to 1(V) for earth structures (depending on various soil characteristics and to be determined during detailed design). As the intended use for the basins is for a highly managed active quarry site with restricted access, steeper batters would be considered acceptable from a safety perspective. The structural integrity of the internal batter slopes would need to be ensured by a suitably qualified structural and/or geotechnical engineer.

The emergency overflow weirs for Basin 2 and 3 have been sized to convey 50 year ARI flows from each basin. These calculations have been based from Rational Method flow estimations. A summary of the weir flow calculations are provided in **Appendix E**.

The quarry and associated infrastructure will be above the 100 year ARI flood level (approximately 7m AHD). Sedimentation Basin 1.1 extends approximately 20m into the Seelems Creek floodplain fringe of an extensive floodplain (approximately 1,600 m wide) on the western site boundary. It is anticipated that this may have impacts on flood levels in the immediate vicinity of the basin only. The basin design will address any flooding issues in the detailed design phase such that the impact on the floodplain is mitigated.

As there is no external infrastructure adjacent to, or upstream of Sedimentation Basin 1.1, any minor impact that the basin may have on flood levels is not likely to affect any properties. Refer to **Appendix D** for Council's regional flood mapping.

2.2.4 CONSTRUCTION NOTES

The following notes should be referenced during the construction and operational phases of the project:

- Construct access roads with erosion control measures in place;
- Install pipe culverts and internal drainage works;
- Clear vegetation;
- Install the required diversion banks;
- Construct sedimentation basins;
- Strip topsoil and overburden, stockpile and sow within 14 days with appropriate seed/fertiliser mixture;
- Regularly inspect all sediment control structures for damage, and remove sediment to the overburden stockpiles;
- Carry out ongoing maintenance including resewing/fertilising of areas as required;
- At the completion of the extraction stage, progressively reshape, re-topsoil then revegetate all disturbed areas on Lot 401.
- All sealed haul roads constructed for the final extraction phase configuration do not require dust suppression.

2.2.5 STANDARD DRAWINGS

The following standard drawings from the Blue Book are applicable to the recommended erosion and sediment controls:

- Stockpiles – SD4-1
- Earth bank (high flows) – SD5-6
- Earth Basin (wet) – SD6-4
- Rock Check Dams – SD5-4
- Culvert outlet protection (energy dissipater) – SD5-8

These drawings have been included in **Appendix B**.

2.2.6 HAZARDOUS MATERIALS

Any hazardous materials that are kept on site should be stored in an appropriate containment facility and bunded to ensure that in case of a spill, the materials are not released into the downstream receiving environment. Appropriate spill kits and training should be provided for any hazardous materials kept on site.

2.3 DETAILED SITE WATER BALANCE

A detailed site water balance was undertaken to assess the overall site surface water management system and to quantify the volume and frequency of discharges from the site. The site water balance has been prepared to address Conditions 18 and 21 of the Development Consent for Development Application No. SSD 7036 issued by the Department. The parameters of the water balance have been adopted through consultation with representatives from both Quarry Solutions and Groundworks Plus, and is generally in accordance with the guidelines set out in *Managing Urban Stormwater Soils and Construction: Volume 1 (Blue Book) and Volume 2E (Mines & Quarries).*

2.3.1 CLIMATE DATA

The climate data used for the detailed site water balance is listed as follows;

- Daily rainfall data was extracted from the Bureau of Meteorology's website for Coraki (Union Street rain gauge – 058015); and
- Evaporation data was extracted from the nearest pan evaporation gauge at the Alstonville Fruit Research Station (058131), approximately 20km away from the site.

The Coraki rainfall gauge has 115 years of daily rainfall readings from 1900 to 2015. The mean rainfall for Coraki is 1,263 mm/year. The evaporation rates from the Alstonville Fruit Research Station were applied to the surface water areas of each sedimentation basin to calculate the daily evaporation loss from each basin. These adopted monthly evaporation rates are provided in **Table 5.**

Table 5: Adopted Monthly Evaporation Rates

Month	Evaporation (mm/day)
January	5.7
February	5.0
March	4.3
April	3.5
May	2.7
June	2.4
July	2.7
August	3.5
September	4.4
October	5.0
November	5.4
December	5.9

2.3.2 METHODOLOGY

The methodology for the site water balance is to provide three on-site sedimentation basins sized to capture the 90th percentile, 5-day rainfall event with additional storage to facilitate site water reuse. This strategy will reduce the volume of water required to import to site for site demands including dust suppression and plant use, whilst reducing outflow event frequency and volumes.

A detailed water balance model was generated for each individual sedimentation basin and for each scenario. The model was run as a daily time step spreadsheet. The spreadsheet calculates inflows (rainfall-runoff), outflows (evaporation, discharge and reuse) and a final volume at the end of each time step.

The water balance considers the dry, average and wet years of operation by analysing the 115-year climate dataset for the respective 25th, 50th and 75th percentile annual rainfall totals. Each scenario was modelled over a 5-year period found to have a corresponding 5-year average rainfall total similar to the three rainfall scenarios. **Table 6** summarises the dry, average and wet years modelled for the analysis.

Table 6: Water Balance Scenarios

Rainfall Scenario	Percentile (n)	nth percentile annual rainfall total (mm)	Modelled 5-year period	Corresponding 5-year average rainfall total (mm)
Dry	25th	921	1902 through 1906	929
Average	50th	1,155	1944 through 1948	1,150
Wet	75th	1,413	1952 through 1956	1,420

For the purposes of this assessment, it has been assumed that Sedimentation Basins 1.1 and 1.2 behave as a single storage volume for this analysis. A balance pipe or overflow system may be required between Sedimentation Basin 1.1 and 1.2 which is to be configured during detailed design for the intended purpose.

A summary of the modelling methodology and subsequent parameters adopted in consultation with representatives from Groundworks Plus and Quarry Solutions is provided in **Table 7** on the following page.

2.3.3 DUST SUPRESSION

This site water balance model adopts a dust suppression rate of 2 L/m^2/hour for the site as informed by Groundwork Plus via email (dated 26 August 2015). This dust suppression rate was applied to all unsealed roads within the site. The quarry is expected to operate 6 days a week for 13 hours per day, however, the water balance model adopts dust suppression operation for 5 hours per day, 5 days per week to reflect advice received from the quarry operators. Total road areas were calculated from unsealed roads proposed for the final extraction stage.

2.3.4 BUND AND EXTERNAL IRRIGATION

Additional irrigation areas were identified for the site in order to manage the volume of captured runoff within the basin and provide necessary basin storage for runoff events. This potential irrigation area is identified in **Appendix A** and consists of the bunded areas of the site and an area external to the site quarry area. This irrigation is considered to be non-critical water use and is applied in the water balance if the service volume on each basin remains to be exceeded after critical water use (dust suppression) has been subtracted from each basin.

As indicated in **Table 7**, an irrigation rate of 4 L/m^2/hour was adopted for the moderate to dry months of March through November, while double this rate was adopted for the wet months of December through March to provide increased basin storages during these wet periods. The water balance model assumes that both bund and external irrigation systems are operational for 11 hours per day, 5 days per week. However, where rainfall exceeds 20mm in 24 hours, it is deemed

unfeasible to operate the irrigation system due to possible saturation of the irrigation area, and the water balance model is set up accordingly.

The areas identified for bund and external irrigation supplied from Sedimentation Basins 1, 2 and 3 are approximately 1.46 ha and 12.35 ha, respectively. The water balance model only adopts 50% of this external irrigation area in order to account for rotating irrigation equipment around the site to avoid over-saturation of the irrigation area.

Table 7: Summary of modelling parameters and methodology

Inflows	Criteria	Parameter / Methodology
Rainfall/ Runoff	Daily rainfall (mm) multiplied by a runoff volume coefficient (C_v) of 0.74	Dry, average and wet years correspond to the respective 25th, 50th and 75th percentile annual rainfall totals for the 115-year dataset
Outflows	**Criteria**	**Parameter / Methodology**
Evaporation	Evaporation rates as listed in Table 5 applied to each sedimentation basin surface area.	Daily rates are derived from the monthly values in Table 5 such that evaporation is calculated on a daily time-step.
Dust suppression (Critical water use)	Operation times: Rate applied to haul roads: Haul road area: Rate applied to stockpile areas:	5 hours per day, 5 days a week 2 L/m^2/hour 0.32 ha (excludes sealed roads) Considered as part of 20kL/day for 'Operations'
Total irrigation (Non-critical water use)	Operation times: External irrigation area (total available area = 24.71 ha): Bund irrigation area: Irrigation rates; Non-wet (April-November): Wet (December-March): Daily rainfall threshold when irrigation is stopped: (Only conduct external irrigation if service volume is exceeded after critical water use is first carried out.)	11 hours/day, 5 days/week 12.35 ha (50% of total adopted) 1.46 ha (approx. 1,900m of bund length) 4 L/m^2/hour 8 L/m^2/hour 20 mm -
Basin dosing and controlled discharge	After dosing of sedimentation basins and a minimum residence time (without any additional rainfall), each basin is lowered to provide a 'service volume' in each basin to facilitate reuse ; Adopted residence time: Allowable rainfall during residence period:	4 days 0 mm
Operations (processing plant and associated stockpiles)	Daily usage (5 days/week) for plug mill operation. Daily usage rate: Initial storage tank size prior to usage from basins:	20 kL/day 500kL (supplied by Basin 2 only in modelling)

2.3.5 BASIN DOSING AND DISCHARGE

The water balance includes dosing and discharge of treated water. It is assumed that immediately after a rain event in each scenario, the basins will be dosed (with an appropriate dosing agent). After 4 days of residence time, the basin is lowered (either by gravity or pump) to again operate with capacity for the 90th percentile, 5-day storm volume within each basin. If a rain event occurs within the 4-day period after dosing, the water will not be released until further dosing is completed and/or the discharge requirements are achieved following any subsequent rainfall event(s). Remaining water in the sediment storage zone may be used for on-site dust suppression.

2.3.6 SITE WATER BALANCE RESULTS

As per Table 6.2 in Volume 2E of the Mines and Quarries manual, the indicative average annual sediment basin overflow frequency for the 90th percentile, 5-day storm event is 2 to 4 spills per year. **Table 8** provides a summary of the water balance modelling performance of each sediment basin for the dry, average and wet scenarios as defined above.

Table 8: Site Water Balance Summary

Basin ID	Scenario	Average Number of Outflow Events (Events/year)	Average Outflow Volume Per Year (m^3/year)	Average no. outflow events following >60.2mm 5-day rainfall (events/year)
Sedimentation Basin 1.1 and 1.2	Dry	2	2,932	0
	Average	3	7,088	0
	Wet	4	11,865	0
Sedimentation Basin 2	Dry	3	17,771	0
	Average	5	34,184	0
	Wet	5	55,147	0
Sedimentation Basin 3	Dry	3	13,030	0
	Average	4	24,774	0
	Wet	5	41,426	0
Site totals	**Dry**	**3**	**33,773**	**0**
	Average	**4**	**66,046**	**0**
	Wet	**5**	**108,438**	**0**

As shown in **Table 8**, the detailed site water balance modelling shows that the sedimentation basins overflow occasionally throughout an average year. The average number of overflow events is 4 times per year. This is equivalent to the spill frequency identified within the *Managing Urban Stormwater Soils and Construction: Volume 2E (Mines & Quarries)*.

Overflows from the sedimentation basins are, on average, preceded by a 5-day rainfall total of greater than 170mm.

The total sedimentation basin volumes calculated in **Section 2.2.3** are required for the sediment control function of the basin only. The total adopted volume of each on-site basin to achieve the above site water balance is provided in **Table 9**, which considers the water supply requirements of each basin in addition to sediment control.

Table 9: Adopted Sediment Basin Sizes Required for Water Balance

Basin Name	Required 90th percentile (5-day storm) Sedimentation Basin Volume (m^3)	Adopted Basin Volume for Water Balance (m^3)
Sedimentation Basin 1.1 and 1.2	4,358	6,898
Sedimentation Basin 2	14,033	14,250
Sedimentation Basin 3	11,647	12,805

2.3.7 EXTERNAL WATER SUPPLY

The overall philosophy adopted in the detailed site water balance was to minimise residual water within the sedimentation dams through on-site reuse (as per **Table 7**) in order to minimise the potential for outflow events. With this philosophy, an external water supply will be required in the form of imported water in order to meet site demands (excluding potable water demands).

From the water balance simulations, the average number of days per year where the full site demand cannot be met by water reuse from the sedimentation dams are shown below in **Table 10**.

Table 10: Critical Site Demands

Basin ID	Scenario	Average days per year where critical water demand not supplied by basin	Average annual external water supply required (ML/year)
Sedimentation Basin 1.1 and 1.2	Dry	23	0.2
	Average	0	0
	Wet	0	0
Sedimentation Basin 2	Dry	59	0.7
	Average	25	0.3
	Wet	24	0.3
Sedimentation Basin 3	Dry	114	2.5
	Average	81	1.8
	Wet	75	1.6
Site averages	**Dry**	**65**	**1.1**
	Average	**35**	**0.7**
	Wet	**33**	**0.6**

It is noted that the days shown in **Table 10** are directly associated with the simulated significant rainfall events when the sedimentation dams have been lowered in order to accommodate any potential in-flow events. As would be expected, on-site water demand for dust suppression and irrigation is significantly reduced for a number of days post rainfall events. However, the water balance simulation is not able to incorporate this factor into the model. Accordingly, in real terms the number of days per year where full site demand will not be met is less than shown in **Table 10**.

It is evident from the results in **Table 10**, that Sedimentation Basin 3 is underperforming in terms of the average number of days per year where critical water demand is not met. However, when compared with the average annual water supply volumes required from Basin 3, it is apparent that relatively low volumes are required from external supply. It is noted that

there is an existing pond immediately downstream of Basin 3 with a storage capacity of approximately 7.8 ML. This existing pond has the capacity to compensate for the shortfalls in critical water demand not met from Basin 3, and significantly reduce the number of days per year where external water supply is required.

In addition, it is expected that as part of the operational philosophy of the quarry, certain measures would be implemented to further minimise the number of times per year that importation of water is required. These measures to assist in reducing the number of days with a potential water shortage are:

- The use of dust suppression agents to reduce water usage;
- Reducing traffic areas while water sealing other areas; and
- Additional water storages (a 500kL tank is proposed) where water from the sedimentation dams can be pumped and stored for later use.

With the above measures in place and recognition of the limitations of the water balance model, it is expected that the average number of days per year where full site water demands cannot be met will be significantly less than the estimates in **Table 10**.

2.4 REHABILITATION WATER REQUIREMENTS

As outlined in **Section 7.11** of the Environmental Impact Statement lodged, rehabilitation is only relevant to Lot 401 and will only commence once terminal benches and floor are reached and the resource is exhausted. The proposed rehabilitation works will be guided by the Rehabilitation Management Plan to ensure the final landform is safe, stable, self-sustaining and compatible with the intended final land use. The Petersons Quarry will remain operational therefore any rehabilitation requirements will be considered separately in the future.

As the rehabilitation work will only commence post extraction, the site water balance included in this assessment was undertaken for the operational stage of the quarry only and no considerations were given for the site rehabilitation. However, having considered the timing of the proposed rehabilitation work, site water balance for rehabilitation is not considered necessary.

2.5 MONITORING PROGRAM

The principle objective of the monitoring program is to provide mitigation measures to minimise the potential impacts of the quarry operations. The site monitoring program is to be implemented in accordance with the Monitoring and Recording Conditions outlined in Section 5 of the site EPL, which provides information on specific site management measures relating to potential environmental impacts from the quarry during its operation. The water discharge limits for the site are outlined in **Table 1** in **Section 1.4** of this report and are to be read in conjunction with *M2 Requirement to monitor concentration of pollutants discharged* of the EPL.

Surface water quality monitoring is to be conducted at the water release points indicated on Drawing No. 15-001850.SK02-C provided in **Appendix A** prior to discharge from the site, with the exception of site discharges that have occurred as a result of rainfall exceeding 60.2 mm over any consecutive five-day period. Visual inspections for evidence of oil and grease should be conducted during on-site monitoring and levels of pH are to be analysed in-situ by a suitably qualified person by way of an EPA approved probe at each water release point (i.e. the site sedimentation basins). Water samples are to be collected and sent to a NATA accredited laboratory for analysis of Total Suspended Solids (TSS). Erosion and sediment control inspections should also be carried out in conjunction with water quality monitoring whilst on site, and observations recorded for auditing purposes.

All surface water quality monitoring is to be recorded and documented such that in the event of any exceedances of the site discharge limits, a written report may be provided upon request by an authorised officer of the EPA. In accordance with *R3.3* of the EPL, such a written report should include (but not be limited to) the following;

- the cause, time and duration of the exceedance event;
- the type, volume and concentration of pollutants discharged as a result of the event;
- action taken by the licensee in relation to the event, including any follow-up contact with any
- complainants;
- details of any measure taken or proposed to be taken to prevent or mitigate against a recurrence of
- the exceedance event; and
- any other relevant matters.

3 CONCLUSION

The outcomes of the stormwater quality management and impacts assessment are summarised below:

- Erosion and sediment control measures will be put in place for management of water quality during construction and operation activities;
- Three sedimentation basins are proposed to treat surface water runoff and for reuse on site;
- Sediment basin calculations demonstrate that there is sufficient volume within each basin to provide the minimum required equivalent 90th percentile, 5-day rainfall event volume for stormwater quality polishing and treatment as well as to meet the site water supply requirements is detailed in **Section 2.3**.
- There is no groundwater interaction anticipated;
- With the proposed surface water management strategy, there will be no significant impact on water quality and quantity as a result of the development; and
- Detailed water balance modelling demonstrates that with the proposed surface water management system, overflows from the site are within the recommended values in *Managing Urban Stormwater Soils and Construction: Volume 2E (Mines & Quarries)*.

4 RECOMMENDATIONS

Based on the aforementioned outcomes, the following recommendations are made:

- Incorporate the proposed erosion and sediment control strategies for the development;
- Sedimentation basins to be sized based on the 90th percentile, 5-day rainfall event with reuse from dust suppression and an external irrigation scheme;
- Confirm the sediment basin sizes and locations during the detailed design phase; and
- Ongoing water quality testing of water within each sedimentation basin before and after dosing and discharge.

Detailed design may result in changes to the proposed concept strategies presented in this report, however the design objectives are to be maintained.

5 REFERENCES

Development Consent for Development Application No. SSD 7036, Schedule 3 – Environmental Performance Conditions.

Managing Urban Stormwater Soils and Construction: Volume 1 (Blue Book)

Managing Urban Stormwater Soils and Construction: Volume 2E (Mines & Quarries).

Revised Stormwater Management Concept, Drawing No. 1837.068-1 prepared by Groundwork Plus, dated 18 July 2016.

Conceptual Site Layout Plan, Drawing No. 1837.027-2 prepared by Groundwork Plus, dated 27 July 2016.

APPENDIX A SURFACE WATER MANAGEMENT PLAN

- Figure 15-001850.SK02 Final extraction stage catchment plan

WATER RELEASE POINT 2

SEDIMENTATION BASIN 1.2 (SUBJECT TO DETAILED DESIGN)

1 DP11254

DIRTY WATER DIVERSION FROM STOCKPILE FLOOR TO SEDIMENTATION BASIN 1.2 (TO BE FINALISED DURING DETAILED DESIGN)

PROTECTED MACADAMIA TREES AND 25m BUFFER

B1

N

WATER RELEASE POINT 1

401 DP633427

FLOOR RL 18m

B2

DRAINAGE LINE FROM PIT FLOOR TO SEDIMENTATION BASIN 2 (TO BE FINALISED DURING DETAILED DESIGN)

SEDIMENTATION BASIN 1.1 APPROX. 20m ENCROACHMENT INTO SEELEM CREEK FLOODPLAN (SUBJECT TO DETAILED DESIGN)

SEDIMENTATION BASIN 2 (SUBJECT TO DETAILED DESIGN)

WATER RELEASE POINT 3

STOCKPILE AREA RL40m

INDIGENOUS HERITAGE NON-DISTURBANCE ZONE

408 DP1166287

402 DP802985

STOCKPILE AREA RL40m

PROCESSING PLANT AREA

B3

403 DP802985

STABILISED FLOW PATH

WEIGHBRIDGE

CATCHMENT AREAS

CATCHMENT	AREA (ha)
1	6.52
2	21.00
3	16.90
TOTAL	44.42

1 DP1165893

403 DP802985

WATER RELEASE POINT 4

EXISTING DAM

SEDIMENTATION BASIN 3 (SUBJECT TO DETAILED DESIGN)

Petersons Quarry Rd

LEGEND:

- SITE BOUNDARY
- FUTURE CATCHMENT BOUNDARY
- EXISTING CONTOURS
- B1 CATCHMENT LABEL
- INIDICATIVE FLOW ARROW
- Q100 FLOOD LINE (RL 10m)
- EXISTING SWALE DRAIN
- BUND
- CLEAN WATER DIVERSION
- DIRTY WATER DIVERSION
- INDICATIVE SEDIMENTATION BASIN
- POTENTIAL IRRIGATION AREA

NOTE:

1. THIS DRAWING IS TO BE READ IN CONJUNCTION WITH THE LATEST ISSUE OF CALIBRE CONSULTING LETTER No. 15-001850.
2. LAYOUT OF THE PRELIMINARY SEDIMENTATION BASINS, INTERNAL AND EXTERNAL SITE DRAINAGE IS CONCEPTUAL ONLY. SUBJECT TO DETAILED DESIGN.

CONCEPT PLAN ONLY
NOT TO BE USED FOR CONSTRUCTION PURPOSES

FILE: 15-001850_SK02.dwg DATE: 14-09-2015 TIME: 10:45
Xref's: USR: adam broif

		CALCS	DRAWN	DATE	AMENDMENT DETAILS
FIRST ISSUE		AB	SL	11.09.15	
AMENDMENTS	A	AB	SL	11.03.16	SEDIMENTATION DAM 2 AMENDEMENT
	B	AMcP	JW	09.06.16	MINOR AMENDMENTS - REVISED SITE CATCHMENTS
	C	DY	TW	13.09.16	AMENDED BASIN 2 & 3 AND CONTRIBUTING CATCHMENTS
	D				
	E				
	F				

DESIGN CHECK

DRAWN CHECK

SCALE (METRES)
1:2000 20 0 20 40 60 80 100 A1
1:4000 A3

MICROFILM No.

PROJECT No. 15-001850

APPROVED
ANDREW McPHAIL RPEQ 6921
FOR & ON BEHALF OF CALIBRE CONSULTING (QLD) PTY LTD

CLIENT
QUARRY SOLUTIONS PTY LTD

PROJECT
CORAKI QUARRY

calibre CONSULTING

CONSULT AUSTRALIA

Calibre Consulting (Qld) Pty Ltd
Level 6, 199 Grey Street, South Brisbane QLD Australia 4101
Telephone 07 3095 3444 Facsimile 07 3095 3460
Brisbane Cairns Townsville Ipswich Singapore Sunshine Coast

Quality Environmental Management Company ISO 14001 Lic 4084

DRAWING TITLE
FINAL EXTRACTION STAGE CATCHMENT PLAN

DRAWING NUMBER 15-001850.SK02

ISSUE C

APPENDIX B EROSION AND SEDIMENT CONTROL DRAWINGS

- *Managing Urban Stormwater Soils and Construction: Volume 1 (Blue Book)* Erosion and Sediment Control standard drawings

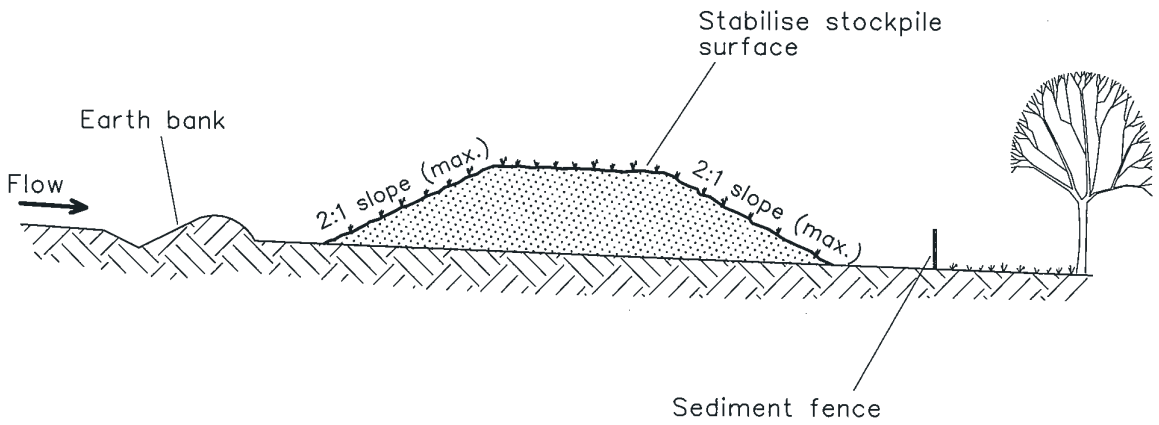

Construction Notes

1. Place stockpiles more than 2 (preferably 5) metres from existing vegetation, concentrated water flow, roads and hazard areas.
2. Construct on the contour as low, flat, elongated mounds.
3. Where there is sufficient area, topsoil stockpiles shall be less than 2 metres in height.
4. Where they are to be in place for more than 10 days, stabilise following the approved ESCP or SWMP to reduce the C-factor to less than 0.10.
5. Construct earth banks (Standard Drawing 5-5) on the upslope side to divert water around stockpiles and sediment fences (Standard Drawing 6-8) 1 to 2 metres downslope.

STOCKPILES **SD 4-1**

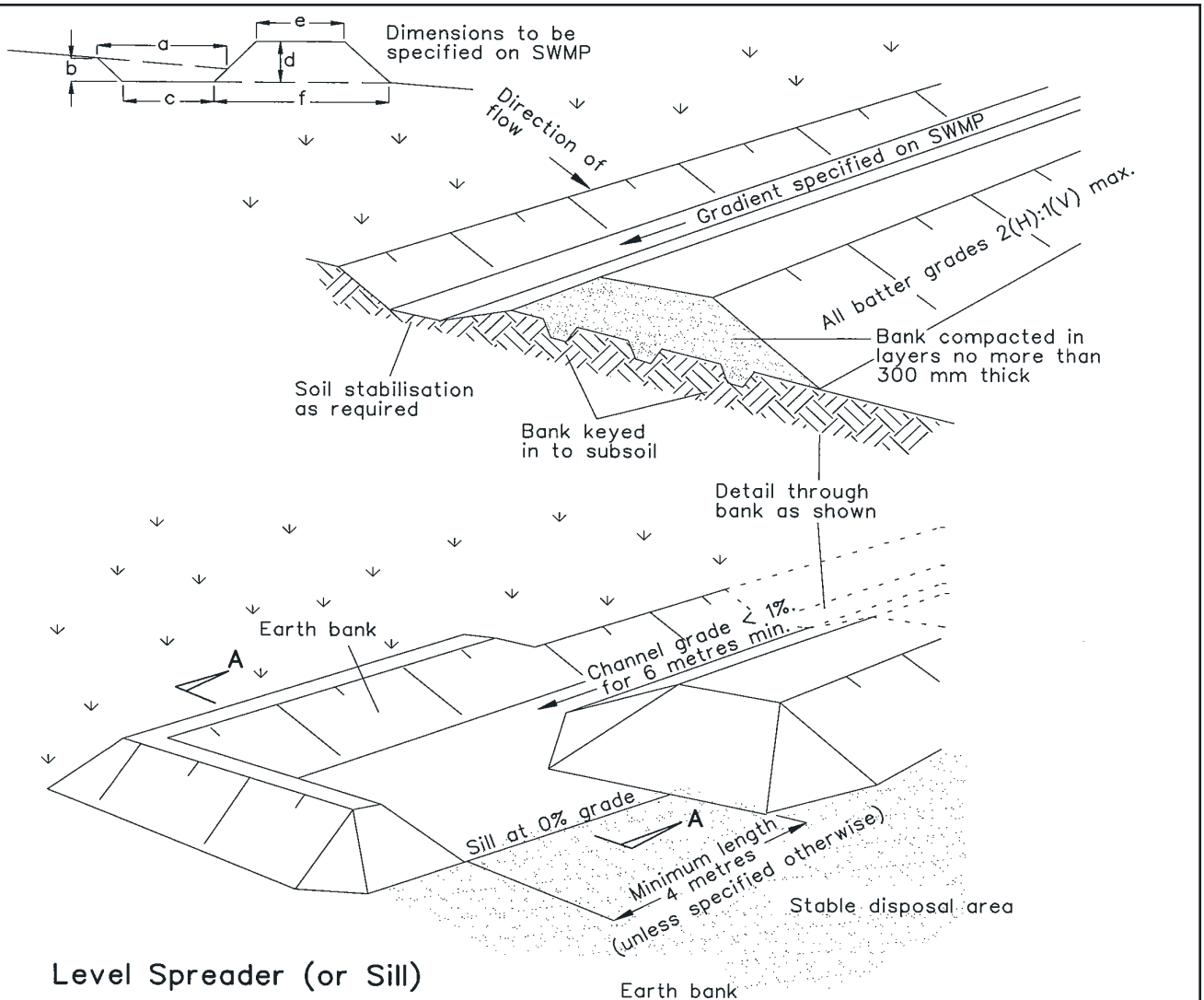

Level Spreader (or Sill)

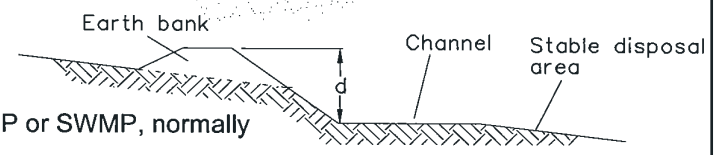

Section AA

Construction Notes

1. Construct at the gradient specified on the ESCP or SWMP, normally between 1 and 5 percent
2. Avoid removing trees and shrubs if possible - work around them.
3. Ensure the structures are free of projections or other irregularities that could impede water flow.
4. Build the drains with circular, parabolic or trapezoidal cross sections, not V-shaped, at the dimensions shown on the SWMP.
5. Ensure the banks are properly compacted to prevent failure.
6. Complete permanent or temporary stabilisation within 10 days of construction following Table 5.2 in Landcom (2004).
7. Where discharging to erodible lands, ensure they outlet through a properly constructed level spreader.
8. Construct the level spreader at the gradient specified on the ESCP or SWMP, normally less than 1 percent or level.
9. Where possible, ensure they discharge waters onto either stabilised or undisturbed disposal sites within the same subcatchment area from which the water originated. Approval might be required to discharge into other subcatchments.

EARTH BANK (HIGH FLOWS) SD 5-6

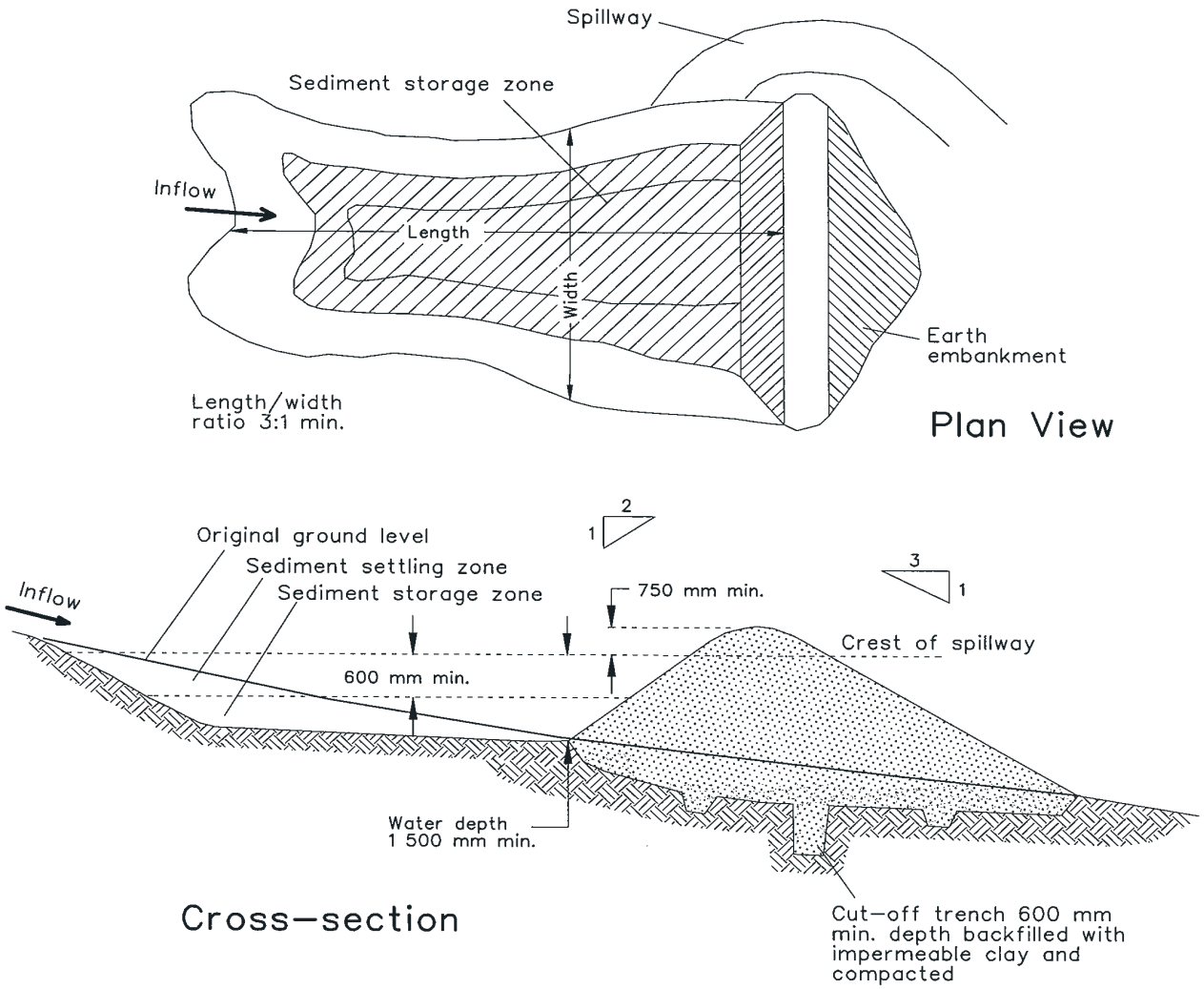

Construction Notes

1. Remove all vegetation and topsoil from under the dam wall and from within the storage area.
2. Construct a cut-off trench 500 mm deep and 1,200 mm wide along the centreline of the embankment extending to a point on the gully wall level with the riser crest.
3. Maintain the trench free of water and recompact the materials with equipment as specified in the SWMP to 95 per cent Standard Proctor Density.
4. Select fill following the SWMP that is free of roots, wood, rock, large stone or foreign material.
5. Prepare the site under the embankment by ripping to at least 100 mm to help bond compacted fill to the existing substrate.
6. Spread the fill in 100 mm to 150 mm layers and compact it at optimum moisture content following the SWMP.
7. Construct the emergency spillway.
8. Rehabilitate the structure following the SWMP.

EARTH BASIN - WET

(APPLIES TO 'TYPE D' AND 'TYPE F' SOILS ONLY)

SD 6-4

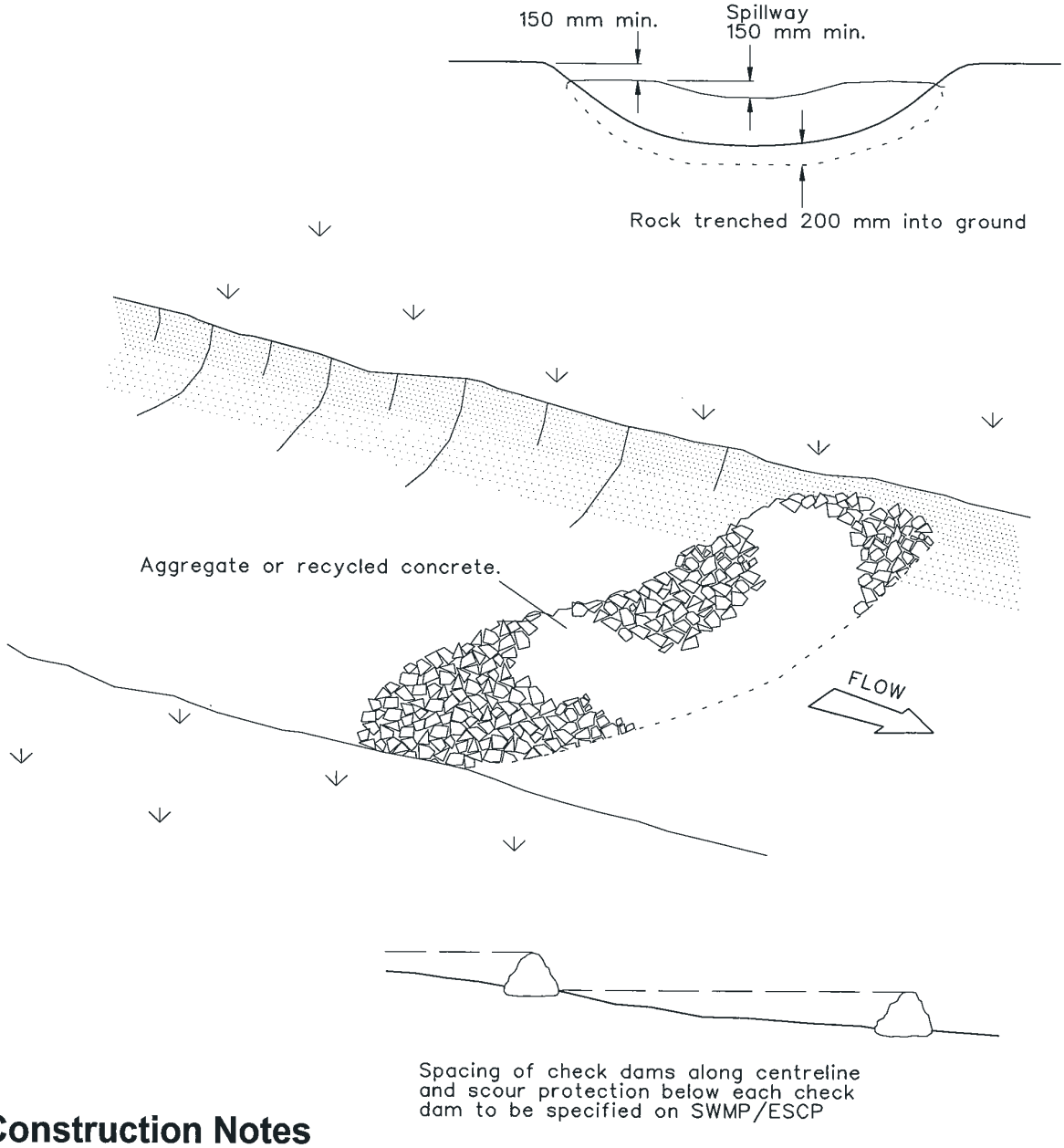

Construction Notes

1. Check dams can be built with various materials, including rocks, logs, sandbags and straw bales. The maintenance program should ensure their integrity is retained, especially where constructed with straw bales. In the case of bales, this might require their replacement each two to four months.

2. Trench the check dam 200 mm into the ground across its whole width. Where rock is used, fill the trenches to at least 100 mm above the ground surface to reduce the risk of undercutting.

3. Normally, their maximum height should not exceed 600 mm above the gully floor. The centre should act as a spillway, being at least 150 mm lower than the outer edges.

4. Space the dams so the toe of the upstream dam is level with the spillway of the next downstream dam.

ROCK CHECK DAM

SD 5-4

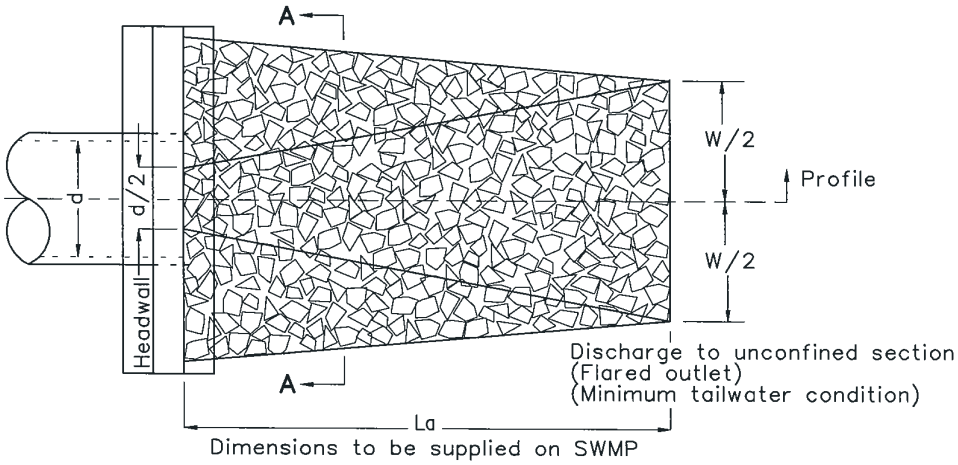

PLAN VIEW

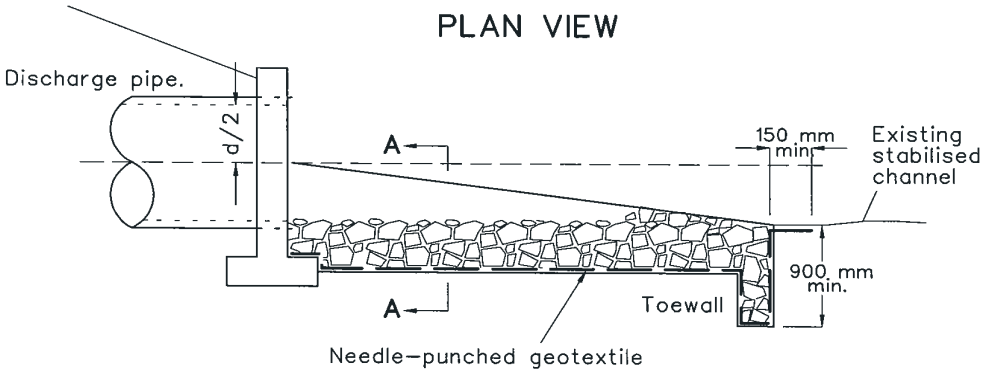

PLAN VIEW

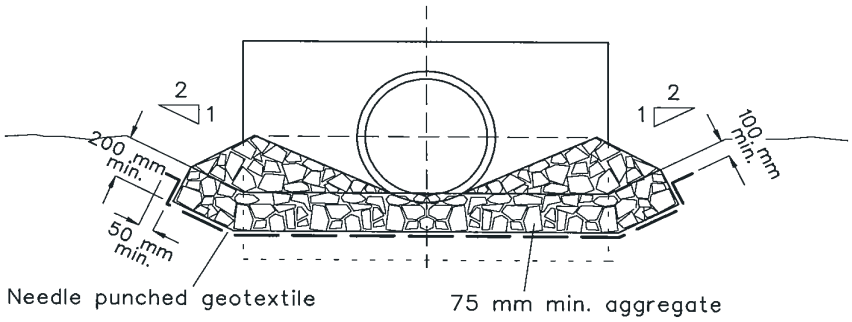

CROSS SECTION AA

Construction Notes

1. Compact the subgrade fill to the density of the surrounding undisturbed material.
2. Prepare a smooth, even foundation for the structure that will ensure that the needle-punched geotextile does not sustain serious damage when covered with rock.
3. Should any minor damage to the geotextile occur, repair it before spreading any aggregate. For repairs, patch one piece of fabric over the damage, making sure that all joints and patches overlap more than 300 mm.
4. Lay rock following the drawing, according to Table 5.2 of Landcom (2004) and with a minimum diameter of 75 mm.
5. Ensure that any concrete or riprap used for the energy dissipater or the outlet protection conforms to the grading limits specified on the SWMP.

ENERGY DISSIPATER SD 5-8

APPENDIX C WATERCOURSES ADJACENT TO SITE

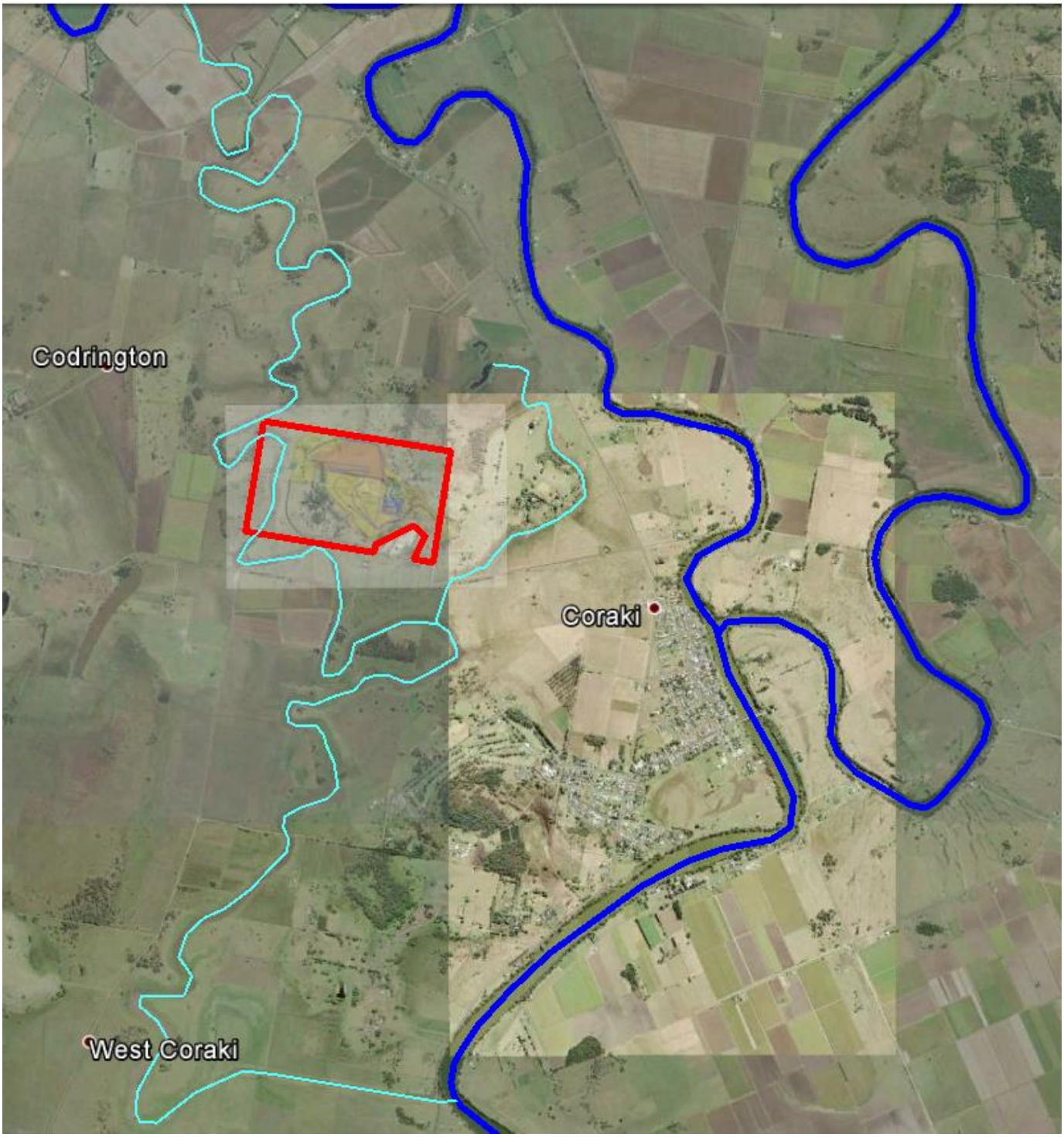

APPENDIX D RICHMOND VALLEY COUNCIL FLOOD MAPPING

From Council's flood mapping, approximate floodplain widths have been measured. During flooding events, Seelems Creek acts as an overflow path from the Richmond River floodplain.

The overall width of the Seelems Creek floodplain is 1,600 m at its minimum width (adjacent to the site). The overall width of the greater Richmond River Floodplain upstream of the site is approximately 6,600 m.

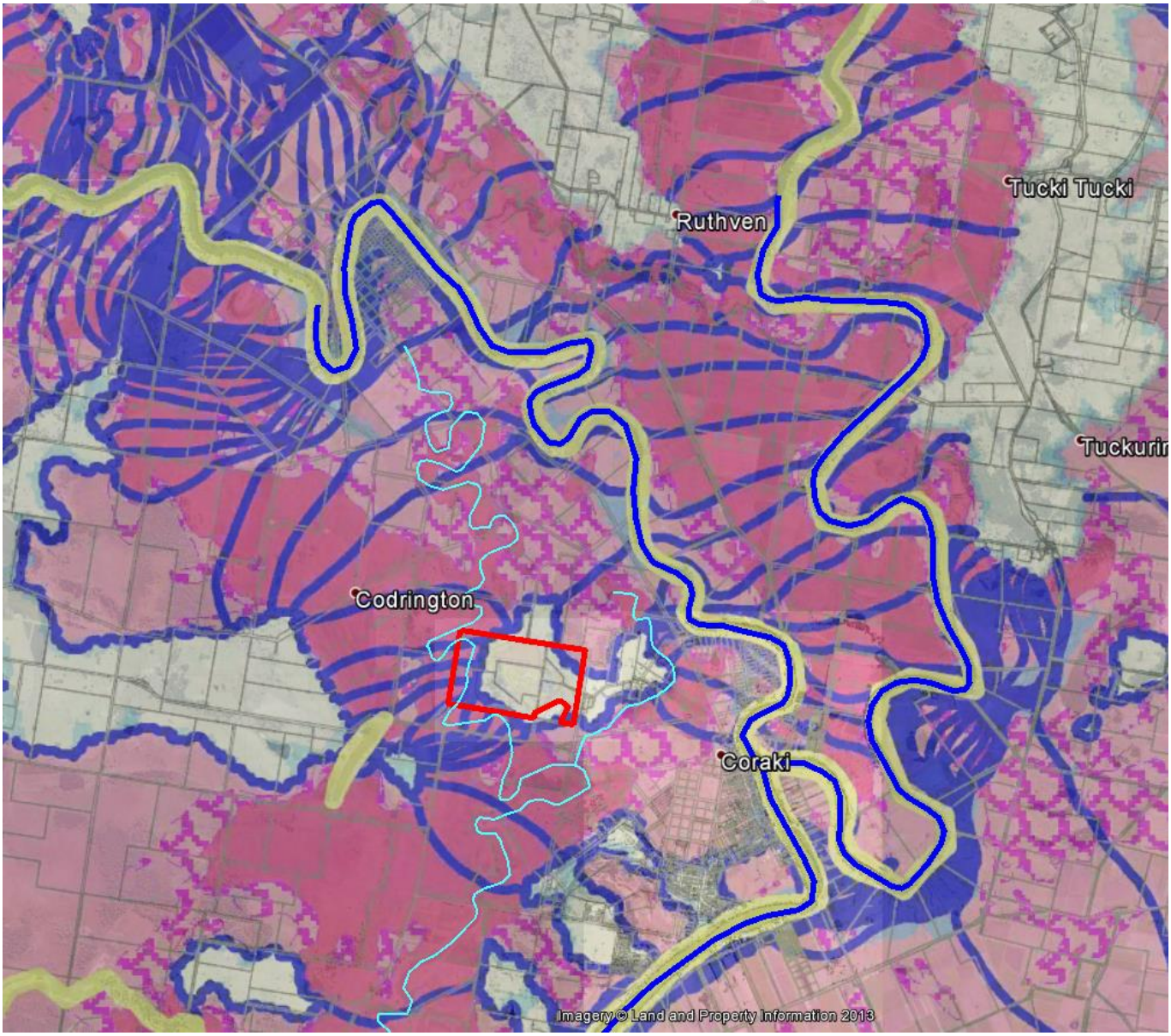

Daniel Yates

From: Jim Lawler <jlawler@groundwork.com.au>
Sent: Friday, 12 August 2016 11:45 AM
To: Daniel Yates
Subject: FW: Coraki - sed basin design and potential flood impacts

Dan

See email below confirming flood levels to be reflected on the drawing.

Get better soon.

Thanks

Jim Lawler
Team Leader - Planning

GROUNDWORK plus

GROUNDWORK Plus
Resources, Environment, Planning, Laboratories

6 Mayneview Street, MILTON QLD 4064 AUSTRALIA
(PO Box 1779, MILTON QLD 4064)

Ph: +61 7 3871 0411 Fax: +61 7 3367 3317
www.groundwork.com.au

From: Andrew McPhail [mailto:Andrew.McPhail@calibreconsulting.co]
Sent: Tuesday, 14 June 2016 11:49 AM
To: Jim Lawler <jlawler@groundwork.com.au>
Cc: Nancy Hsiao <nhsiao@groundwork.com.au>; Terry Woods <terry.woods@quarrysolutions.com.au>; Brian Turner <brian@seecivil.com.au>; John Tew <John.Tew@seecivil.com.au>
Subject: RE: Coraki - sed basin design and potential flood impacts

Hi Jim,

Thanks for this information. I have confirmed with Council via telephone that the May 2015 levels are current. As you stated below for the 100 year ARI event *being 7.1mAHD for the NE basin and 6.3mAHD at the S basin.*

I apologise that the past Calibre letter indicated a wrong flood level. Plans will be updated for subsequent submissions.

As such it seems that the NE Basin design is above the flood level of 7.1m AHD.

Please call to discuss further if you have any further queries.

regards

Andrew McPhail
Principal Engineer - Water & Environment

Calibre Consulting
Ground Floor, 545 Queen Street, Brisbane, Qld, 4000
PO Box 10349, Adelaide Street, Brisbane, Qld, 4000
T 07 3895 3444
E Andrew.McPhail@calibreconsulting.co
www.calibreconsulting.co

From: Jim Lawler [mailto:jlawler@groundwork.com.au]
Sent: Tuesday, 14 June 2016 11:01 AM
To: Andrew McPhail <Andrew.McPhail@calibreconsulting.co>
Cc: Nancy Hsiao <nhsiao@groundwork.com.au>; Terry Woods <terry.woods@quarrysolutions.com.au>; Brian Turner <brian@seecivil.com.au>; John Tew <John.Tew@seecivil.com.au>
Subject: Coraki - sed basin design and potential flood impacts

Andrew,
As discussed, Quarry Solutions are of the opinion that it is not practical to construct the north east sediment basin outside of the flood impact area. The attached emails include:

- correspondence from myself to Quarry Solutions identifying the q100 constraint, and
- an email from Quarry Solutions with a detailed design for the north east sed basin going below RL10, and
- original email from Council providing flood data (*q100 being 7.1mAHD for the NE basin and 6.3mAHD at the S basin*)

As you are aware, the original application was based on containing all impacts above the q100 flood line to avoid the need to undertake a flood impact assessment. If the q100 is in fact 7.1mAHD the Quarry Solutions design may work (although it is still undersized compared to your calculations). *Could you double check what the q100 level is and confirm?* If it is RL10 and not 7.1 please consider what the potential cost would be to prepare an advice or flood impact assessment to justify construction of the sed basins below the q100 line. Could you also consider how long it would take to prepare the advice/flood impact assessment.

Terry and Brian (and John),
A change such going into the q100 line would need to proceed through a s96 modification application to receive approval for the flood impact assessment and the revised sed basin layouts. This process would include a minimum 30 business day notification period and at least a further 20 business assessment period by the State. This is in addition to the time taken to prepare the flood impact assessment and s96 modification documents. A key risk is that such delays will prevent construction of the sediment basins until the s96 is granted leaving the current operations non-compliant with the current conditions of the EPL. However, if we are able to confirm the q100 level this may resolve the situation favourably. Lets wait to hear confirmation from Andrew and then regroup.

Kind regards,

Jim Lawler
Team Leader - Planning

GROUNDWORK Plus
Resources, Environment, Planning, Laboratories

6 Mayneview Street, MILTON QLD 4064 AUSTRALIA
(PO Box 1779, MILTON QLD 4064)

Ph: +61 7 3871 0411 Fax: +61 7 3367 3317
www.groundwork.com.au

APPENDIX E RATIONAL METHOD AND MANNING'S FLOW CALCULATION SHEETS

Project: Coraki Quarry
User: Daniel Yates
Organization: Calibre Consulting (Aust) Pty Ltd
Date: 13/09/2016
Report File: \\bnenas01\projects\15\001850\Data Exchange\Out\20160912 - Dan Shared Doc's\[AMcP Basin Summary.xlsx]Channel 3E

Rational Method Flows

ARI	f_Y
1	0.8
2	0.85
5	0.95
10	1
20	1.05
50	1.15
100	1.2

			Rainfall Intensity (mm/hr), by ARI						
Catchment ID	A (ha)	t_c	**1**	**2**	**5**	**10**	**20**	**50**	**100**
1	6.521	16	71.1	90.0	111.2	**123.6**	139.6	161.0	177.0
2	21.000	25	55.0	69.9	86.6	**96.1**	108.8	125.4	138.2
3	17.430	23	58.5	74.3	91.9	**102.0**	115.4	133.2	146.6

Catchment ID	Peak Flows, Q (m^3/s), by ARI						
ARI:	1	2	5	10	20	50	100
1	0.928	1.248	1.723	2.017	2.392	3.021	3.466
2	2.314	3.124	4.321	5.047	6.002	7.577	8.714
3	2.042	2.755	3.809	4.450	5.284	6.680	7.672

Project:	Coraki Quarry
User:	Daniel Yates
Organization:	Calibre Consulting (Aust) Pty Ltd
Date:	13/09/2016
Report File:	\\bnenas01\projects\15\001850\Data Exchange\Out\20160912 - Dan Shared Doc's\[AMcP Basin Summary.xlsx]Channel 3E

Basin 2 Weir Flow (m3/s)

Q = B.Cw.L.h^(2/3) L = Q/[B.Cw.h^(2/3)] h = [Q/(B.Cw.L)]^(3/2)

INPUT	Parameters	OUTPUT	Units	
7.577	Q_{50}		m3/s	
1	B			blockage factor
1.66	Cw			weir coefficient (1.66)
0.5	h		m	flow depth over weir (m)
	L	**7.246**	**m**	**Min. required design length of weir (m)**

	Peak Flows, Q (m^3/s), by ARI						
ARI	1	2	5	10	20	**50**	100
Catchment 2	2.314	3.124	4.321	5.047	6.002	**7.577**	8.714

Project:	Coraki Quarry
User:	Daniel Yates
Organization:	Calibre Consulting (Aust) Pty Ltd
Date:	13/09/2016
Report File:	\\bnenas01\projects\15\001850\Data Exchange\Out\20160912 - Dan Shared Doc's\[AMcP Basin Summary.xlsx]Channel 3E

Basin 3 Weir Flow (m3/s)

Q = B.Cw.L.h^(2/3) L = Q/[B.Cw.h^(2/3)] h = [Q/(B.Cw.L)]^(3/2)

INPUT	Parameters	OUTPUT	Units	
6.680	Q_{50}		m3/s	
1	B			blockage factor
1.66	Cw			weir coefficient (1.66)
0.5	h		m	flow depth over weir (m)
	L	**6.388**	**m**	**Min. required design length of weir (m)**

	Peak Flows, Q (m^3/s), by ARI						
ARI	1	2	5	10	20	**50**	100
Catchment 3	2.042	2.755	3.809	4.450	5.284	**6.680**	7.672

Channel ID 2C
Mannings Equation for Open Channel Flow in grassed swales

$Q=R^{2/3}*S^{1/2}*A/n$

For simple trapezoidal channels

S=slope m/m		0.0075	0.8%	1 in 133.3333
Base width		5		
Side Slope	1 in	1		
Depth (d)		0.6		
Grass height (h)		0.05	h for turf	0.05
d/h%		1200	for sedges	0.3
n		0.034	From Barling & Moore chart (following sheet)	
Top Width		6.2 m		
XS Area		3.360 m^2		
Perimeter		6.697 m		
R		0.502		

Q[design]	5.047	m^3/sec	10-yr ARI Rational calcs
Q=	5.402	m^3/sec	
v=	1.608	m/sec	
If t=	5	mins	
L=	482.4	m	

For Safety reasons v*d must be less than 0.6
Expected v*d 0.96

Table 8.6.1 – Typical bank scour velocities

Bank condition	Typical bank scour velocity [1] (m/s)
Non vegetated banks:	
Highly erodible sandy-loam soils	0.5
Moderately erodible clay-loam soils	0.6
Lean clayey soils	0.6 to 1.2
Heavy clayey soils	0.7 to 1.5
Poorly vegetated banks:	
Banks with sparse groundcover	1.0 to 1.5 [2]
Well vegetated, erosion-resistant soils:	
Grassed banks	2.0
Banks with thick shrub and tree cover	2.5
Banks with a good, healthy coverage of fibrous-rooted herb layer plants such as *Lomandra*	3.0

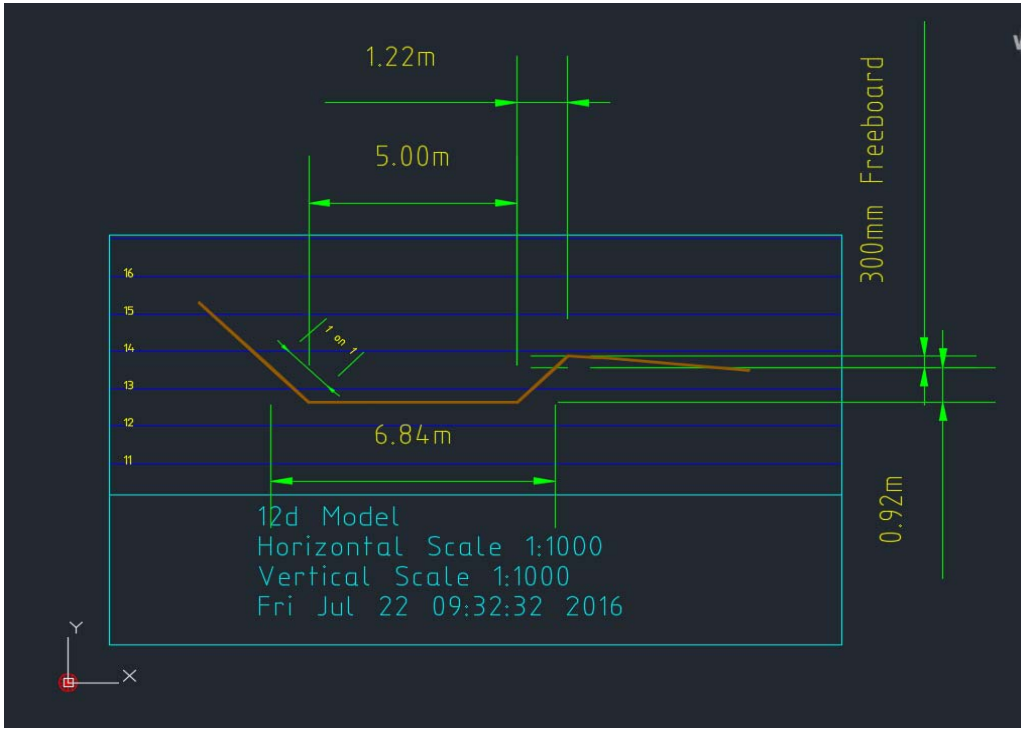

Channel ID 3E
Mannings Equation for Open Channel Flow in grassed swales

$Q=R^{2/3}*S^{1/2}*A/n$

For simple trapezoidal channels

S=slope m/m		0.0156	1.6%	1 in 64.10256
Base width		1.67		
Side Slope	1 in	2		
Depth (d)		0.7		
Grass height (h)		0.05	h for turf	0.05
d/h%		1400	for sedges	0.3
n		0.034	From Barling & Moore chart (following sheet)	
Top Width		4.47	m	
XS Area		2.149	m^2	
Perimeter		4.800495	m	
R		0.447662		

Q[design]	4.450	m^3/sec	10-yr ARI Rational calcs
Q=	4.619	m^3/sec	
v=	2.149	m/sec	
If t=	5	mins	
L=	644.7	m	

For Safety reasons v*d must be less than 0.6
Expected v*d 1.50

Table 8.6.1 – Typical bank scour velocities

Bank condition	Typical bank scour velocity [1] (m/s)
Non vegetated banks:	
Highly erodible sandy-loam soils	0.5
Moderately erodible clay-loam soils	0.6
Lean clayey soils	0.6 to 1.2
Heavy clayey soils	0.7 to 1.5
Poorly vegetated banks:	
Banks with sparse groundcover	1.0 to 1.5 [2]
Well vegetated, erosion-resistant soils:	
Grassed banks	2.0
Banks with thick shrub and tree cover	2.5
Banks with a good, healthy coverage of fibrous-rooted herb layer plants such as *Lomandra*	3.0

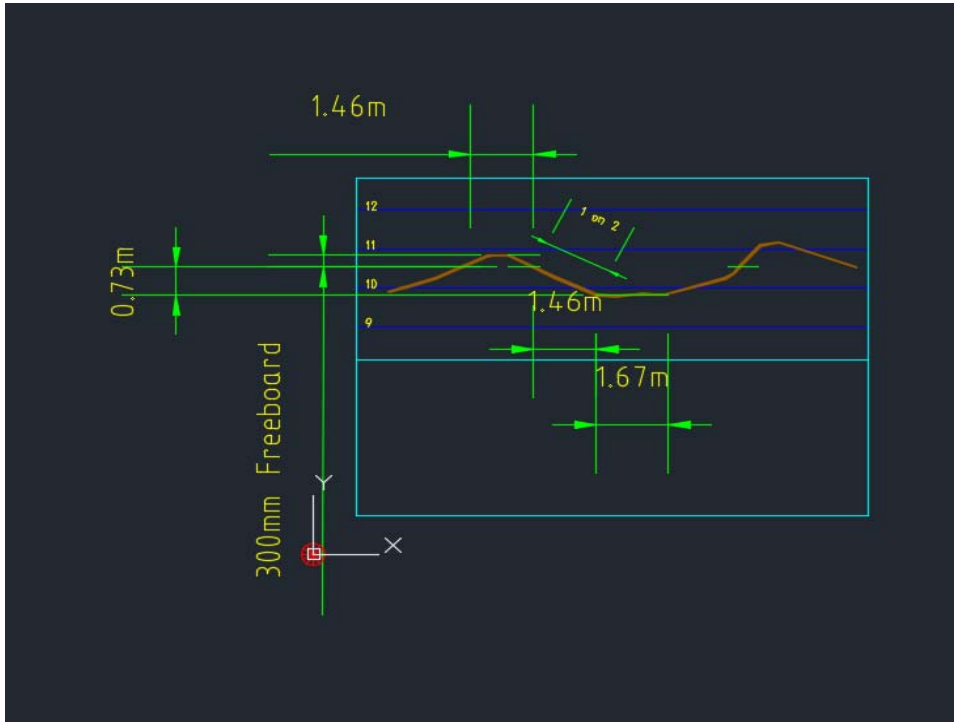

APPENDIX F NSW GOVERNMENT DEPARTMENT & AGENCY CORREPONDENCE

Planning Services
Resource Assessments
Name: Michelle Kirkman
Phone: 9228 6342
Email: michelle.kirkman@planning.nsw.gov.au

Ms Nancy Hsiao
Town Planning Consultant
Groundwork Plus
PO Box 1779
MILTON QLD 4074

Coraki Quarry (SSD 7036)
Approval of Consultants

I refer to your emails dated 3, 14 and 15 June 2016, seeking the Secretary's approval of experts preparing the Water Management Plan and Independent Traffic Audit for Coraki Quarry. You also requested confirmation from the Department that the expert proposed for conducting the Noise Compliance Review is suitably qualified and experienced.

Please be advised that the Department has considered the qualifications and experience of these consultants and that the Secretary endorses the appointments as follows:

- Richard Jones, Senior Associate Director - Traffic from TTM Consulting for the conduct of the Independent Traffic Audit required under Schedule 3 condition 28; and

- Andrew McPhail, Senior Principal Engineer and Michelle Worcester, Senior Environmental Scientist from Calibre Consulting for the preparation of the Water Management Plan required under Schedule 3 condition 21.

I also advise that the Department considers Ben Hyde from MWA Environmental to be suitably qualified and experienced to undertake the Noise Compliance Review as required under Schedule 3 condition 7.

Should you have any questions about this letter, please contact Michelle Kirkman on 9228 6342.

Yours sincerely

Howard Reed 21.6.16
Director Resource Assessments

As nominee of the Secretary

Jim Lawler

From: Janelle Bancroft <Janelle.Bancroft@epa.nsw.gov.au>
Sent: Friday, 16 September 2016 1:49 PM
To: Jim Lawler
Cc: Nancy Hsiao; Andrew McPhail; Daniel Yates
Subject: RE: SSD 7036 Coraki Quarry - draft water management plan for comment

Hi Jim
Thank you for the opportunity to comment on the water management plan for Coraki Quarry. The EPA has reviewed the proposal and believes that it covers the requirements.

As advised previously, the EPA does not have a role in the approval of such.

Janelle Bancroft
Ph 02 6640 2513

From: Jim Lawler [mailto:jlawler@groundwork.com.au]
Sent: Wednesday, 14 September 2016 1:18 PM
To: Janelle Bancroft <Janelle.Bancroft@epa.nsw.gov.au>
Cc: Nancy Hsiao <nhsiao@groundwork.com.au>; Andrew McPhail <Andrew.McPhail@calibreconsulting.co>; Daniel Yates <Daniel.Yates@calibreconsulting.co>
Subject: SSD 7036 Coraki Quarry - draft water management plan for comment

Janelle,

For Coraki Quarry, we also have to prepare a water management plan to comply with the conditions of the consent. Similar to the noise management plan we are required to consult with the EPA as part of the preparation of the water management plan. A draft of the water management plan is attached for your comment. As per the noise management plan, express approval is not required from the EPA, but your comment would be appreciated. We would greatly appreciate it if you could provide comment as a matter of urgency by Friday.

The relevant condition of consent is as follows:

Water Management Plan
21. The Applicant must prepare a Water Management Plan for the development to the satisfaction of the Secretary. This plan must:
(a) be prepared by suitably qualified and experienced person/s approved by the Secretary;
(b) be prepared in consultation with the EPA and DPI - Water;
(c) be submitted to the Secretary for approval within 6 months of the date of this consent, or prior to the commencement of operations, whichever is earlier, unless otherwise agreed by the Secretary;
(d) include a:
(i) Site Water Balance that includes details of:
- *the volume of water deficit and/or surplus for dry, average and wet years, considering all planned water management infrastructure;*
- *sources and security of water supply, including on-site water storages;*
- *water use and management on site;*
- *any off-site water transfers or discharges including discharge volumes and frequency;*
- *reporting procedures; and*
- *measures that would be implemented to minimise clean water use on site; and*

(ii) Surface Water Management Plan, that includes:
- *detailed baseline data on surface water flows and quality in water bodies that could potentially be affected by the development;*

• a detailed description of the surface water management system on site including the:
o clean water diversion system;
o erosion and sediment controls;
o dirty water management system; and
o water storages;
• provision of a 40 metre buffer zone between watercourses and quarrying operations; and
• a program to monitor and report on:
o any surface water discharges;
o the effectiveness of the water management system; and
o surface water flows and quality in local watercourses.

The Applicant must implement the approved management plan as approved from time to time by the Secretary.

Thanks,

Jim Lawler
Team Leader - Planning

GROUNDWORK Plus
Resources, Environment, Planning, Laboratories

6 Mayneview Street, MILTON QLD 4064 AUSTRALIA
(PO Box 1779, MILTON QLD 4064)

Ph: +61 7 3871 0411 Fax: +61 7 3367 3317
www.groundwork.com.au

Department of Primary Industries
Water

Contact Christie Jackson
Phone 02 6763 1426
Email christie.jackson@dpi.nsw.gov.au

Caibre Consulting
Level 4, 1 Laver Drive
ROBINA NSW 4226

Email: daniel.yates@calibreconsulting.co

Attention: Daniel Yates

Dear Mr Yates,

Coraki Quarry Water Management Plan – Response to DPI Water

I refer to your email dated the 26 October 2016 seeking the Department of Primary Industries – Water's (DPI Water) comments on the response to DPI Water's review of the Water Management Plan for Coraki Quarry.

DPI Water has reviewed the response by the proponent and it is considered DPI Water's concerns have been adequately addressed by the proponent.

DPI Water has no further comments.

If you require clarification on any of the above please contact Christie Jackson on (02) 6763 1426 at the Tamworth office.

Yours sincerely,

Vickie Chatfield
Regional Manager Regulatory Operations
15 November 2016